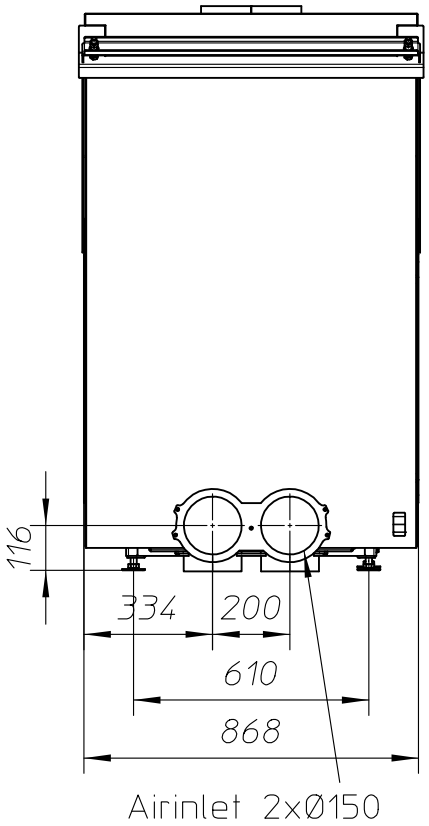

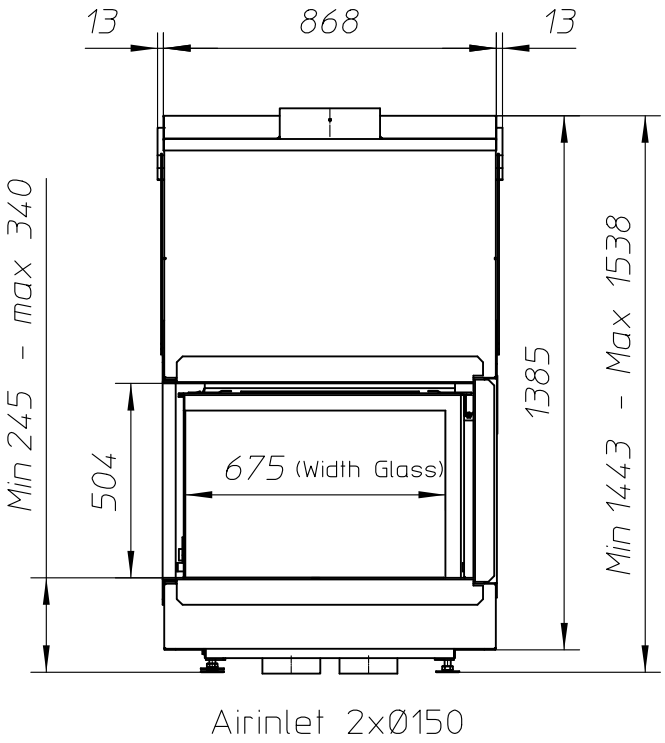

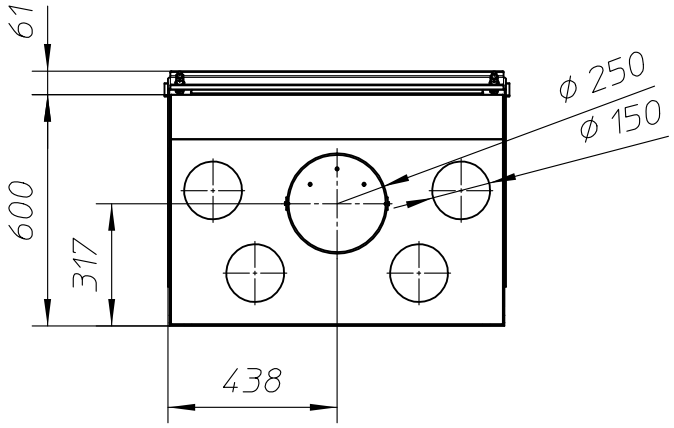

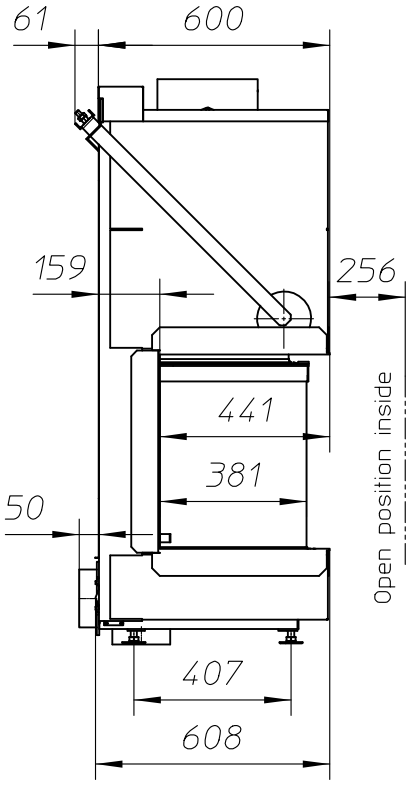

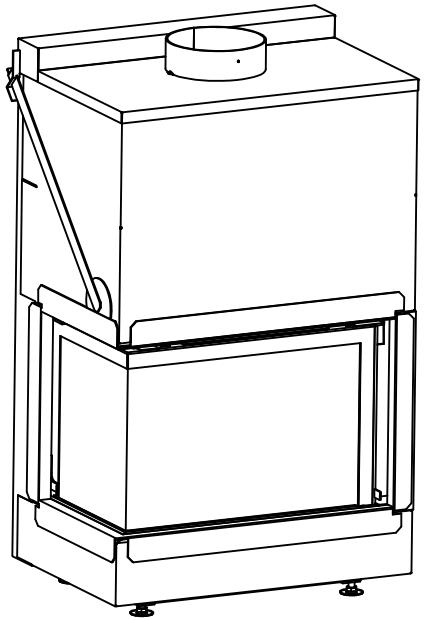

ULTIME D Patented

metalfire

Technical Document

ULTIME D MF 800-50 WHE 2SL V20

Dimensions (mm)

- combustion opening WxHxD:	806x441x504
- external WxDxH:	868x600x1443
- fresh air:	2xØ150
- diameter flue:	Ø250

Technical Data

- Ecolabel:	A+
- capacity:	16kW
- efficiency capacity:	82%
- CO (volume with 13%02):	0.061%
- dust (volume with 13%02):	23.6mg/Nm^3
- weight:	320kg

- Air intake to convection: minimum 720cm^2(4xø150)
- Air exhaust to convection: minimum 720cm^2(4xø150)

Specifications

- inside finishing: heat-resistant black paint
- vermiculite insulation plates
- convection jacket in galvanized steel
- back and sides: ribbed cast iron
- interior finishing: ORIGINAL (ribbed cast iron)

Options

- Finishing frame

Table: prescribed insulation thickness (mm)

Combustable finishing material				
	A	B	C	D
Test report (TC = 0,14 W/mK)	25	25	25	25
Non-combustable finishing material				
non-combustable materials (structural building items EXCLUDED e.g. load bearing walls)	0	0	0	0

TC = thermal conductivity NC = non-combustable

First aid and technical support:
- support@metalfire.eu
- +32 (0)9 261 50 57

scale 1:20 | Rev. A

www.metalfire.eu EN 13229 | CE

General dimensional tolerances up to 6mm
Metalfire preserves the right to modify specifications without previous notice

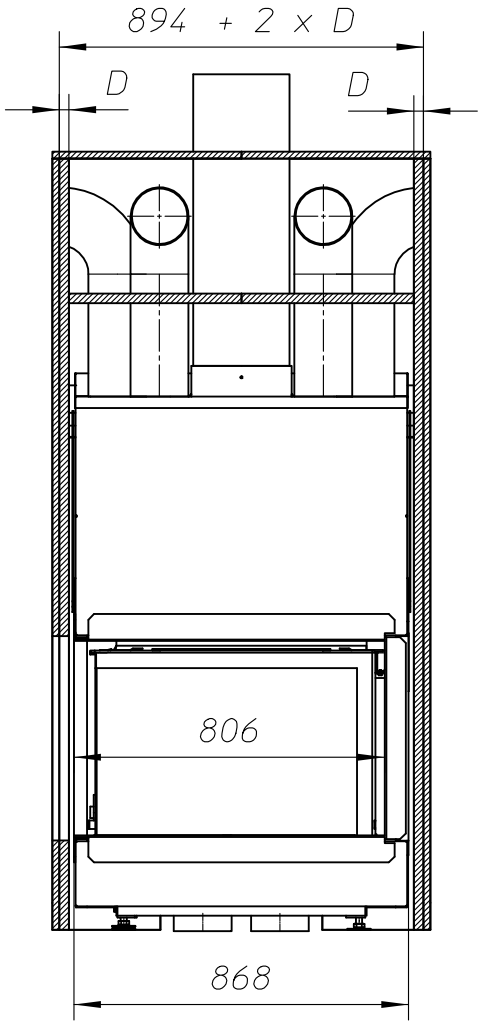

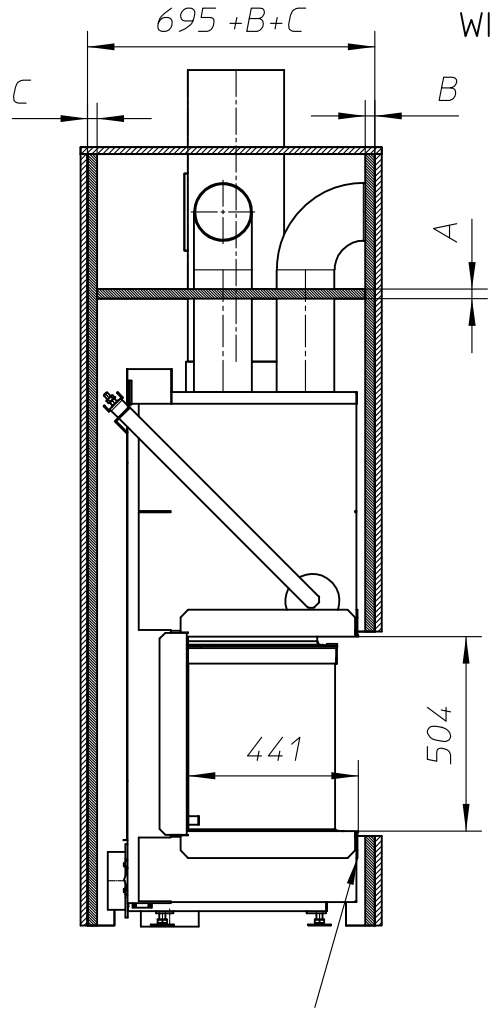

WITHOUT FINISHING FRAME

Min. 13mm between fireplace and insulation

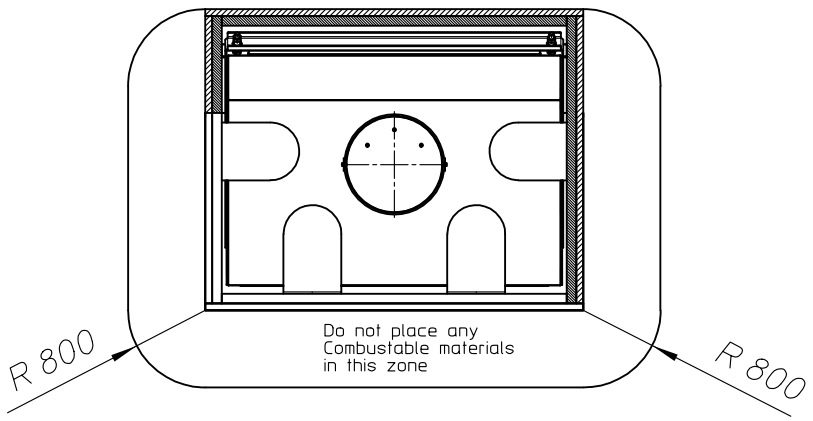

Combustable finishing material

Insulation

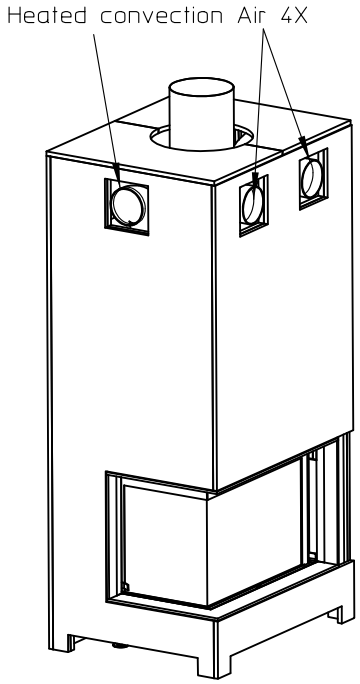

Scale 1:30

ULTIME D Patented

metalfire

Technical Document

ULTIME D MF 800-50 WHE 2SL V20

Dimensions (mm)

- combustion opening WxHxD:	806x441x504
- external WxDxH:	868x600x1443
- fresh air:	2xø150
- diameter flue:	ø250

Technical Data

- Ecolabel:	A+
- capacity:	16kW
- efficiency capacity:	82%
- CO (volume with 13%02):	0.061%
- dust (volume with 13%02):	23.6mg/Nm^3
- weight:	320kg

- Air intake to convection: minimum 720cm^2(4xø150)
- Air exhaust to convection: minimum 720cm^2(4xø150)

Specifications

- inside finishing: heat-resistant black paint
- vermiculite insulation plates
- convection jacket in galvanized steel
- back and sides: ribbed cast iron
- interior finishing: ORIGINAL (ribbed cast iron)

Options

- Finishing frame

Table: prescribed insulation thickness (mm)

Combustable finishing material	A	B	C	D
Test report (TC = 0,14 W/mK)	25	25	25	25
Non-combustable finishing material				
non-combustable materials (structural building items EXCLUDED e.g. load bearing walls)	0	0	0	0

TC = thermal conductivity NC = non-combustable

First aid and technical support:
- support@metalfire.eu
- +32 (0)9 261 50 57

scale 1:20 | Rev. A

www.metalfire.eu EN 13229 | CE

General dimensional tolerances up to 6mm
Metalfire preserves the right to modify specifications without previous notice

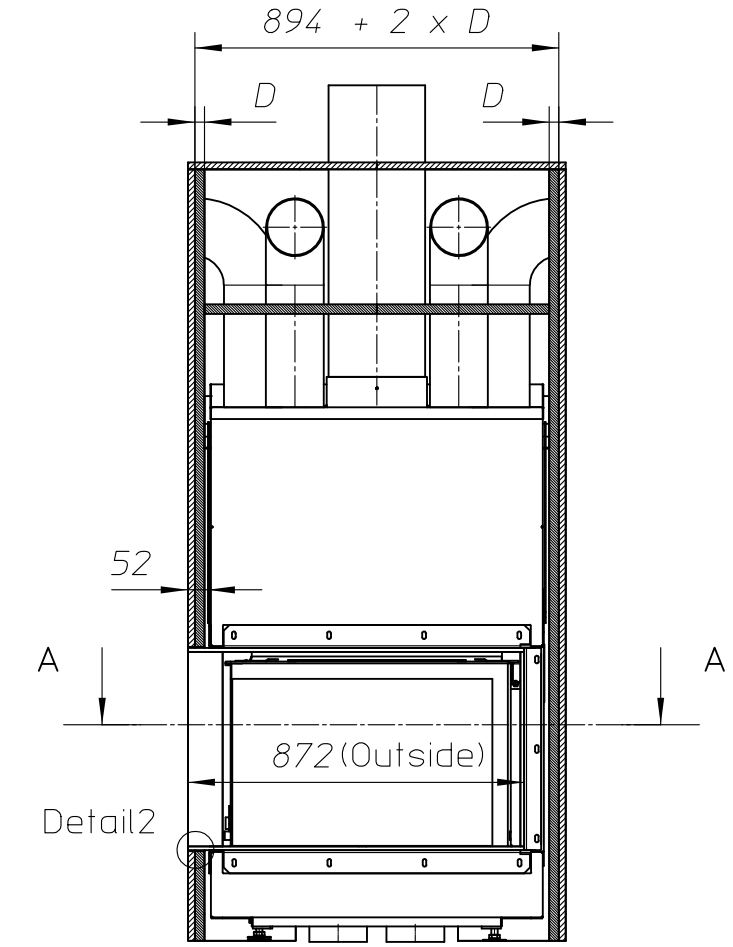

WITH FINISHING FRAME 90/10

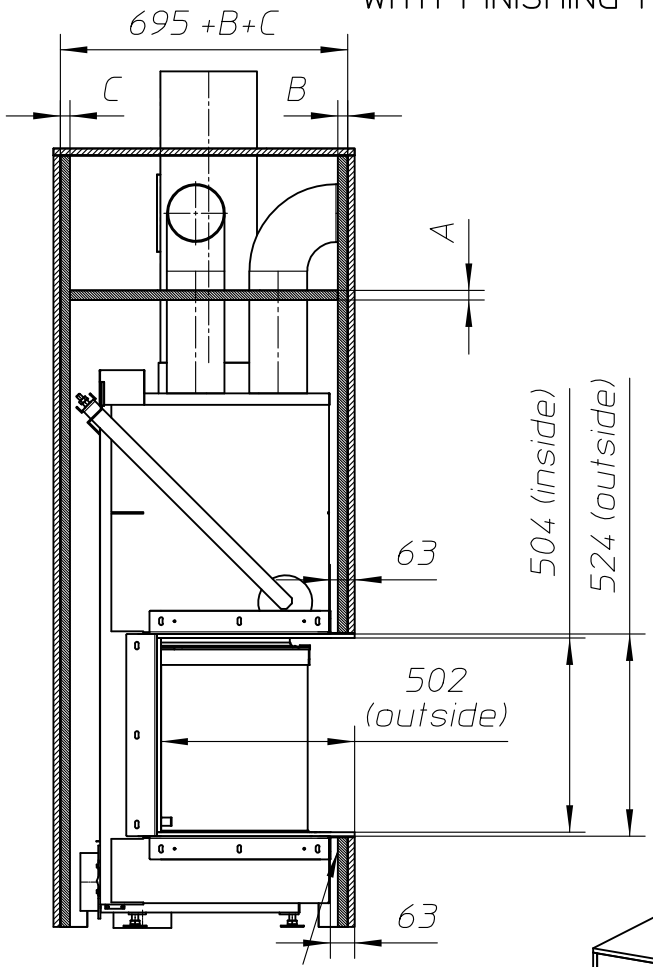

Min. 13mm between fireplace and insulation

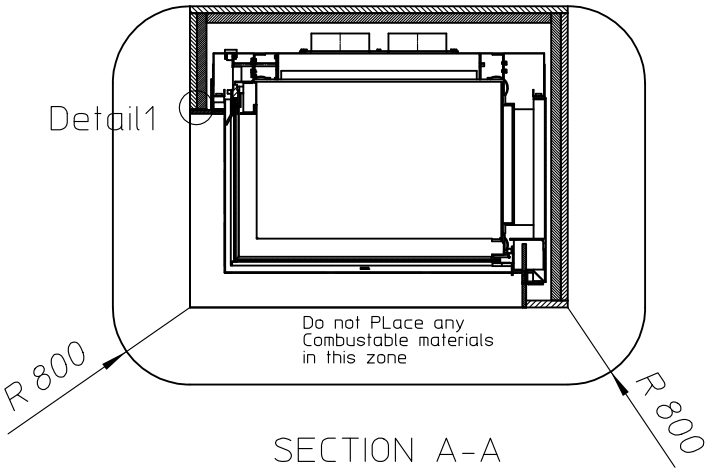

SECTION A-A

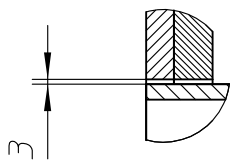

Detail1
Scale 1:5

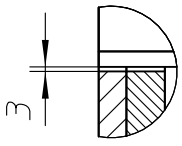

Detail2
Scale 1:5

Combustable finishing material

Insulation

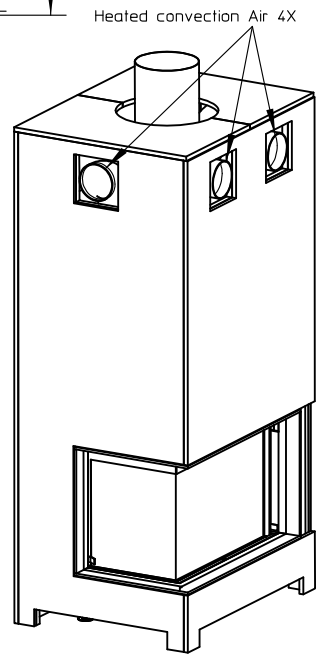

ULTIME D Patented

metalfire

Technical Document

ULTIME D MF 800-50 WHE 2SL V20

Dimensions (mm)

- combustion opening WxHxD:	806x441x504
- external WxDxH:	868x600x1443
- fresh air:	2xø150
- diameter flue:	ø250

Technical Data

- Ecolabel:	A+
- capacity:	16kW
- efficiency capacity:	82%
- CO (volume with 13%02):	0.061%
- dust (volume with 13%02):	23.6mg/Nm^3
- weight:	320kg

- Air intake to convection: minimum 720cm^2(4xø150)
- Air exhaust to convection: minimum 720cm^2(4xø150)

Specifications

- inside finishing: heat-resistant black paint
- vermiculite insulation plates
- convection jacket in galvanized steel
- back and sides: ribbed cast iron
- interior finishing: ORIGINAL (ribbed cast iron)

Options

- Finishing frame

Table: prescribed insulation thickness (mm)

Combustable finishing material	A	B	C	D
Test report (TC = 0,14 W/mK)	25	25	25	25
Non-combustable finishing material				
non-combustable materials (structural building items EXCLUDED e.g. load bearing walls)	0	0	0	0

TC = thermal conductivity NC = non-combustable

First aid and technical support:
- support@metalfire.eu
- +32 (0)9 261 50 57

scale 1:20 | Rev. A

www.metalfire.eu EN 13229 | CE

General dimensional tolerances up to 6mm
Metalfire preserves the right to modify specifications without previous notice